REMOVAL

1. **REMOVE FRONT WHEELS**
2. **REMOVE ENGINE UNDER COVER RH**
3. **REMOVE ENGINE UNDER COVER LH**
4. **DRAIN AUTOMATIC TRANSAXLE FLUID**
   (a) Remove the drain plug, gasket and drain ATF.
   (b) Install a new gasket and drain plug.
   Torque: 18 N*m (180 kgf*cm, 13 ft.*lbf)
5. **REMOVE FRONT DRIVE SHAFT ASSEMBLY RH**
   HINT:
   (See page DS-5)
6. **REMOVE FRONT DRIVE SHAFT ASSEMBLY LH**
   HINT:
   (See page DS-5)
7. **REMOVE TRANSAXLE HOUSING OIL SEAL (for RH Side)**
   (a) Using SST, pull out the oil seal.
   SST 09308-00010

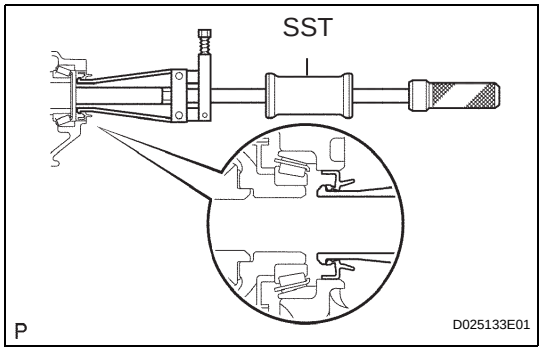

8. **REMOVE TRANSAXLE CASE OIL SEAL (for LH Side)**
   (a) Using SST, pull out the oil seal.
   SST 09308-00010

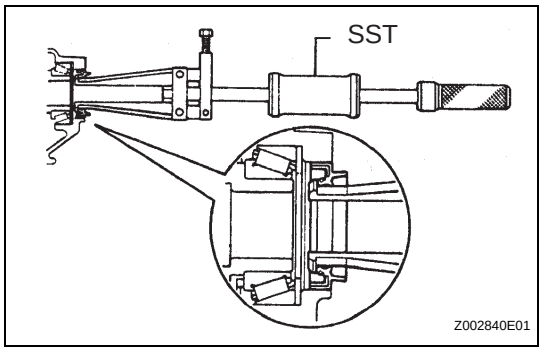

INSTALLATION

1. **INSTALL TRANSAXLE HOUSING OIL SEAL (for RH Side)**
   (a) Using SST and a hemmer, drive in a new oil seal.
   SST 09350-32014 (09351-32130, 09351-32150)
   Oil seal drive in depth:
   1.5 to 2.5 mm (0.059 to 0.098 in.)
   (b) Coat the lip of the oil seal with MP grease.

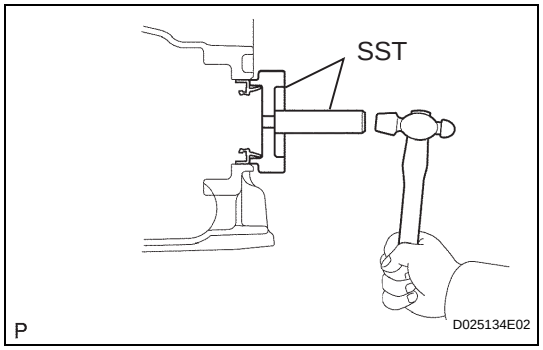

cadiagn.com

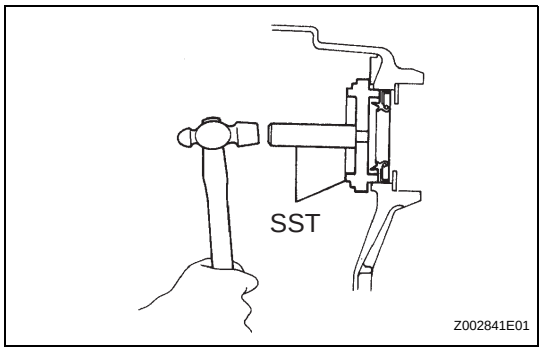

2. INSTALL TRANSAXLE CASE OIL SEAL (for LH Side)

(a) Using SST and a hammer, drive in a new oil seal.
SST 09350-32014 (09351-32111, 09351-32130)
Oil seal drive in depth:
4.8 to 5.8 mm (0.189 to 0.228 in.)

(b) Coat the lip of the oil seal with MP grease.

3. INSTALL FRONT DRIVE SHAFT ASSEMBLY LH

HINT:
(See page DS-12)

4. INSTALL FRONT DRIVE SHAFT ASSEMBLY RH

HINT:
(See page DS-12)

5. INSTALL ENGINE UNDER COVER LH

6. INSTALL ENGINE UNDER COVER RH

7. INSTALL FRONT WHEELS

Torque: 103 N*m (1,050 kgf*cm, 76 ft.*lbf)

8. ADD AUTOMATIC TRANSAXLE FLUID

Fluid type:
T-IV
Capacity:
3.0 liters (3.2 US qts, 2.6 Imp.qts)

9. INSPECT AUTOMATIC TRANSAXLE FLUID

HINT:
(See page AX-71)

10. INSPECT AND ADJUST FRONT WHEEL ALIGNMENT

HINT:
(See page SP-4)

11. CHECK ABS SPEED SENSOR SIGNAL (w/ ABS)

HINT:
- with VSC (See page BC-7)
- without VSC (See page BC-83)

cardiagn.com